ELECTRONIC TORQUE WRENCH

BAHCO DORTMUND

ELECTRONIC-TORQUE WRENCH E-RAD BLU-S

SENSOR CONTROLLED

BAHCO

E-RAD BLU-S

The torque wrench series E-RAD BLU-S is a sensor-controlled bolting tool. Therefore this torque wrench shuts-off with the highest possible accuracy. Every controller can be used in combination with multiple models wrenches. The built in bluetooth unit allows the torque wrench to communicate with the Smart Socket directly.

FEATURES

- Sensor-controlled torque / angle of rotation control
- Torque range 135-16,500Nm
- Repeatability ± 2.0%
- Integrated cooling for continuous use
- LED display on the screwdriver
- Operation via a control unit
- 360 ° rotatable handle
- Password-protected access level
- Selectable menu language
- Presets can be saved
- Field calibration
- Limit value monitoring
- Loosening torque display
- Torque control also in counter-clockwise rotation
- Smart counter for life and maintenance cycle

OPTIONS

- Control unit with 120V
- Cable length 7.6m (other lengths on request)
- ProTight ™ worker control system

SCOPE OF DELIVERY

- Electric torque wrench E-RAD BLU-S
- Control unit 230V
- Control cable 4.6m
- Reaction arm with locking ring
- Factory test certificate
- Operation manual
- Tool case

ACCESSORIES

ADDITIONAL HANDLE

TOOL SUSPENSION

OFFSET-GEAR

SPECIAL REACTION ARM

TWO-HAND OPERATION

EXTENSION

E-RAD BLU-S

TECHNICAL DRAWING

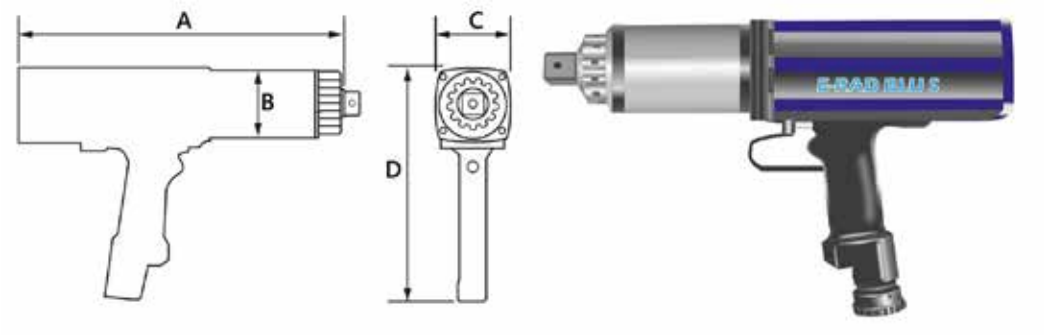

SYMBOLIC

DIMENSIONS

Type	Square drive	Torque [Nm]		Idle speed	Weight	Dimensions [mm]			
		min.	max.	[min^{-1}]	[kg]	A	B	C	D
E-RAD BLU 950-S	¾"	135	950	33	5.5	340	71	77	265
E-RAD BLU 3400-S	1"	340	3400	9.4	7.8	414	84	84	265
E-RAD BLU 4000-S	1"	678	4067	8.5	11.0	426	94	94	283
E-RAD BLU 8000-S	1 ½"	1385	8100	4	15.0	456	109	109	290
E-RAD BLU 10K-S	1 ½"	2034	10170	3.2	15.0	470	116	116	293
E-RAD BLU 15K-S	1½" & 2½"	4050	16500	2.3	22.6	500	133	133	298

EXPLANATION OF THE SYMBOLS

- Battery-operated
- Electrically powered
- Compressed air powered
- Oil operated
- Rotation angle function
- Data transfer to the PC
- Bluetooth connectivity
- Sensor control
- ATEX certification (optional)

BAHCO
DORTMUND

BAHCO GmbH & Co.KG
Martener Hellweg 60
DE- 44379 Dortmund
Phone
+49 231/91 72 11-0
Fax
+49 231/91 72 11-22
www.bahco.de
info@bahco.de

BAHCO

All information subject to change without further notice.
No responsibility is taken for the correctness of the named specifications.

E-RAD BLU-S/05/2022-EN