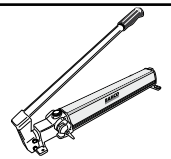

# HYDRAULIK-PUMPE

## Type: P70 - 1000 | P100-1000 | P150-1000

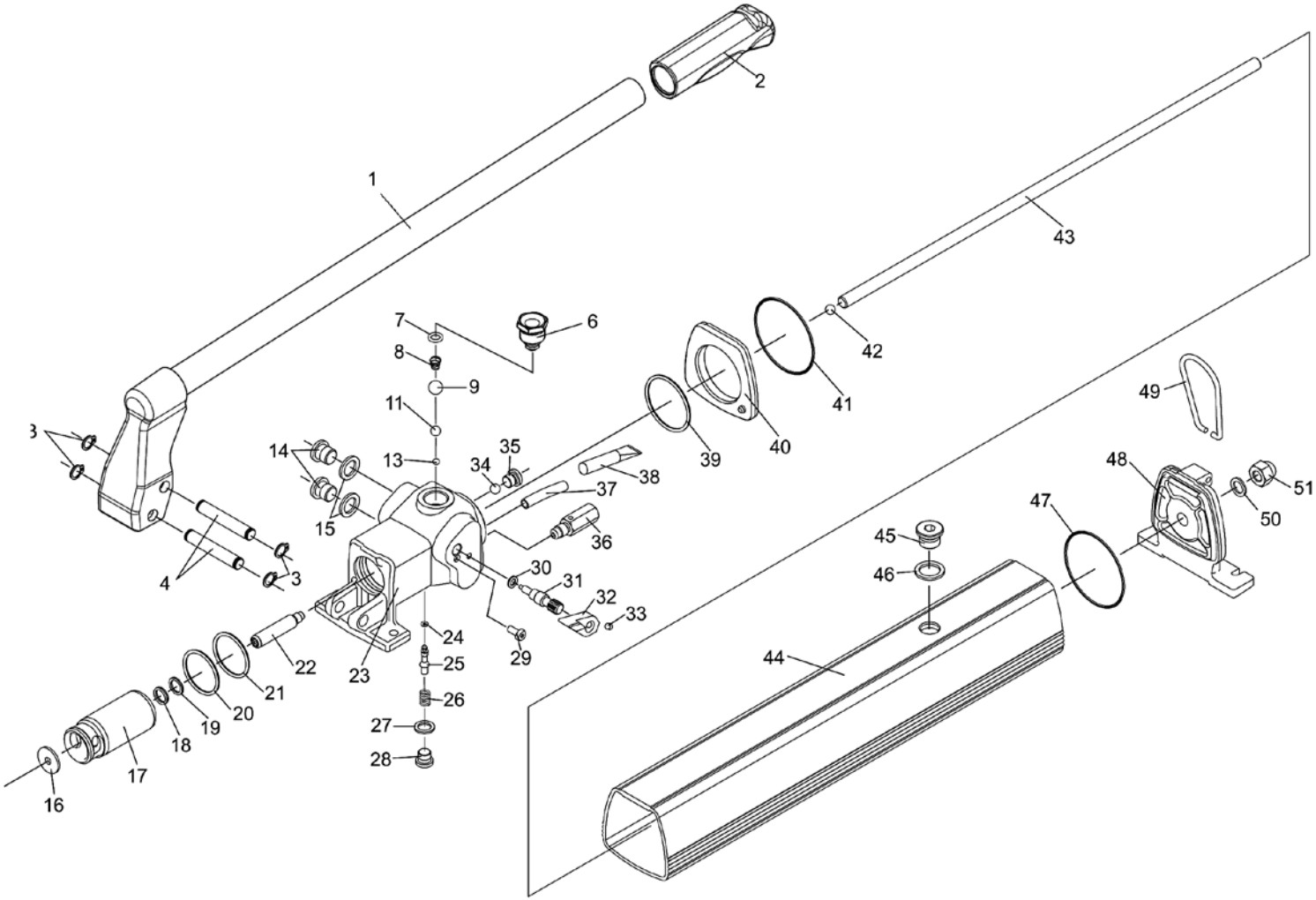


Dokumentationsbeauftragter: Andreas Bos
Stand: 11.2020


**BAHCO GmbH & Co. KG**
Martener Hellweg 60
44379 Dortmund
Telefon: +49(0)231-91 72 11-0
Telefax: +49(0)231-91 72 11-22
Internet: www.bahco.de
E-Mail: info@bahco.de


**Hydraulik-Pumpe - Ersatzteilliste**

Type
**P70-1000 | P100-1000**
**P150-1000**

BAHCO DORTMUND

| Ersatzteilliste | | | | |
|---|---|---|---|---|
| **Nr.** | **Stück** | **Beschreibung** | **Artikel-Nr.** | **im Satz enthalten** |
| 1 | 1 | Hebel | 44693 | [B] |
| 2 | 1 | Handgriff | 44368 | [B] |
| 3 | 4 | Spurring | 14888 | [B] |
| 4 | 2 | Achse | 44381 | [B] |
| 6 | 1 | Pfropfen | 44379 | |
| 7 | 1 | O - Ring | 01041940 | [AD] |
| 8 | 1 | Feder | 19277 | [AD] |
| 9 | 1 | Kugel | 10412 | [AD] |
| 11 | 1 | Kugel | 3740 | [AD] |
| 13 | 1 | Kugel | 16947 | [AD] |
| 14 | 2 | Pfropfen | 16536 | [D] |
| 15 | 2 | Dichtung | 17009 | [AD] |
| 16 | 1 | Scheibe | 44365 | [DF] |
| 17 | 1 | Kolben P70- | 44371 | [DF] |
| | | Kolben P100- \| P150- | 44373 | [DF] |
| 18 | 1 | O - Ring P70- | 01041970 | [ADF] |
| | | O - Ring P100- \| P150- | 01041940 | [ADF] |
| 19 | 1 | Stützring P70- | 34916 | [ADF] |
| | | Stützring P100- \| P150- | 01042040 | [ADF] |
| 20 | 1 | Abstreifer | 44692 | [AD] |
| 21 | 1 | O - Ring | 01040220 | [AD] |
| 22 | 1 | Kolben P70- | 44372 | [DF] |
| | | Kolben P100- \| P150- | 44374 | [DF] |
| 23 | 1 | Ventilgehäuse | 45065 | [D] |
| 24 | 1 | O - Ring | 19458 | [AD] |
| 25 | 1 | Kolben | 29353 | [D] |
| 26 | 1 | Feder | 29384 | [AD] |
| 27 | 1 | Dichtung | 14185 | [AD] |
| 28 | 1 | Pfropfen | 14057 | [D] |
| 29 | 1 | Schraube | 44460 | [CD] |
| 30 | 1 | O - Ring | 17741 | [ACD] |
| 31 | 1 | Entlastungsschraube | 44382 | [CD] |
| 32 | 1 | Hahn | 14548 | [CD] |
| 33 | 1 | Schraube | 15994 | [CD] |
| 34 | 1 | Kugel | 3740 | [AD] |
| 35 | 1 | Pfropfen | 14057 | [D] |

| Ersatzteilliste | | | | |
|---|---|---|---|---|
| **Nr.** | **Stück** | **Beschreibung** | **Artikel-Nr.** | **im Satz enthalten** |
| 36 | 1 | Sicherheitsventil P70 | 44388 | |
| 36 | 1 | Sicherheitsventil P100 | 44390 | |
| 36 | 1 | Sicherheitsventil P150 | 44391 | |
| 37 | 1 | Ansaugrohr | 44364 | [AD] |
| 38 | 1 | Filter | 17618 | [AD] |
| 39 | 1 | O - Ring | 4072 | [AD] |
| 40 | 1 | Frontplatte | 44358 | [E) |
| 41 | 1 | O - Ring | 44398 | [AE] |
| 42 | 1 | Kugel | 3740 | [AE] |
| 43 | 1 | Schraube | 44362 | [E] |
| 44 | 1 | Ölbehälter | 44356 | [E] |
| 45 | 1 | Pfropfen | 17676 | [E] |
| 46 | 1 | Dichtung | 16217 | [AE] |
| 47 | 1 | O - Ring | 44398 | [AE] |
| 48 | 1 | Hinterplatte | 44359 | [E] |
| 49 | 1 | Bügel | 44370 | |
| 50 | 1 | Dichtung | 14185 | [AE] |
| 51 | 1 | Mutter | 44363 | [E] |
| | | | | |
| | | | | |
| | [A] | Im Reparatursatz enthalten P70-/P100-/P150-1000 | 45066-1 | |
| | [B] | Hebel, komplett | 45059 | |
| | [C] | Entlastungsventil, komplett | 45054 | |
| | [D] | Pumpeneinheit, komplett P70- | 45060 | |
| | [D] | Pumpeneinheit, komplett P100-/ P150- | 45055 | |
| | [E] | Ölbehälter, komplett | 45072 | |
| | [F] | Kolbensatz P70- | 45062 | |
| | [F] | Kolbensatz P100-/P150- | 45057 | |
| | | | | |
| | | | | |

**BAHCO GmbH & Co. KG**
Martener Hellweg 60
44379 Dortmund
Telefon: +49(0)231-91 72 11-0
Telefax: +49(0)231-91 72 11-22
Internet: www.bahco.de
E-Mail: info@bahco.de

**Hydraulik-Pumpe - Ersatzteilliste**

Type
**P70-1000 | P100-1000**
**P150-1000**

BAHCO DORTMUND