ACCESSORIES

BAHCO DORTMUND

MECHANICAL LOCKING TCRB

FOR CYLINDER SERIES CRB

BAHCO

TECHNICAL DATA

DESCRIPTION

Heavy lifting requires safety. A lifted load must be locked against dropping during work. BAHCO's mechanical lockings are designed to replace the commonly used, time-consuming and dangerous practice of manual subconstruction of a lifted load. These lockings are available for BAHCO cylinders of CRB series with capacities from 13 up to 100 t and stroke lengths up to 200 mm. These accessorie can be the mechanical lockings easily mounted on the respective cylinder.

Youre handling with a complete unit for combined lifting and safe locking. After mounting the locking on the cylinder, the piston is pumped up and the locking ring is screwed up to the pressure head. The load is now locked and independent of the connected hydraulics. The hydraulics can be switched off and the extended piston is protected against dirt.

Type	Order-No.	for Cylinder	Weight (kg)	incl. Handle
TCRB 13 - 1	40321350	CRB 13 - 50	1.0	–
TCRB 13 - 2	40321310	CRB 13 - 100	1.4	–
TCRB 13 - 3	40321315	CRB 13 - 150	1.8	–
TCRB 25 - 1	40322525	CRB 25 - 25	1.6	–
TCRB 25 - 2	40322550	CRB 25 - 50	1.9	–
TCRB 25 - 3	40322510	CRB 25 - 100	2.6	–
TCRB 25 - 4	40322515	CRB 25 - 150	3.3	–
TCRB 25 - 5	40322520	CRB 25 - 200	4.0	–
TCRB 40 - 1	40324050	CRB 40 - 50	5.0	JA
TCRB 40 - 2	40324010	CRB 40 - 100	6.4	JA
TCRB 40 - 3	40324020	CRB 40 - 200	7.8	JA
TCRB 63 - 1	40326350	CRB 63 - 50	7.5	JA
TCRB 63 - 2	40326310	CRB 63 - 100	9.2	JA
TCRB 63 - 3	40326320	CRB 63 - 200	13.0	JA
TCRB 100 - 1	40321150	CRB 100 - 50	11.3	JA
TCRB 100 - 2	40321110	CRB 100 - 100	13.5	JA
TCRB 100 - 3	40321120	CRB 100 - 200	17.6	JA

- 17 models
- Easy construction
- Fully galvanized design
- Models from 40 tn are supplied with handles
  (also act as a screwing aid)

Technical drawing

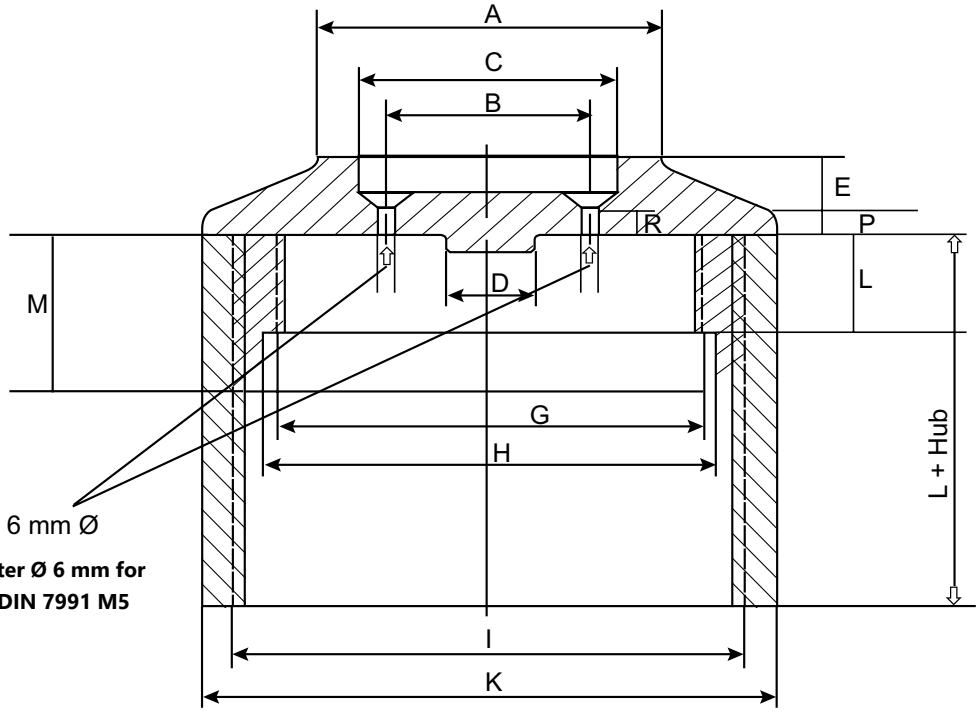

Diameter Ø 6 mm for Screw DIN 7991 M5

Dimensions TCRB

Model	A Ø	B	C Ø	D Ø	E	G
TCRB 13	38 mm	24 mm	XXX	14 mm	16 mm	M 58 x 2
TCRB 25	55 mm	34 mm	XXX	17 mm	21,5 mm	M 80 x 3
TCRB 40	70 mm	35 mm	46 mm	17 mm	26 mm	M105 x 3
TCRB 63	80 mm	52 mm	60 mm	17 mm	30 mm	M 30 x 3
TCRB 100	100 mm	65 mm	80 mm	17 mm	38 mm	M160 x 3

Model	H Ø	I	K Ø	L	M	P	R
TCRB 13	XXX	M68 x 3	74 mm	25 mm	XXX	5 mm	3 mm
TCRB 25	XXX	M90 x 3	100 mm	30 mm	XXX	6 mm	3 mm
TCRB 40	105.5 mm	TR120 x 6	135 mm	25 mm	40 mm	8 mm	3 mm
TCRB 63	130.5 mm	TR145 x 6	160 mm	25 mm	45 mm	8 mm	6 mm
TCRB 100	160.5 mm	TR180 x 10	200 mm	30 mm	45 mm	8 mm	6 mm

All information subject to change without further notice.
No responsibility is taken for the correctness of the named specifications.

BAHCO
DORTMUND

BAHCO GmbH & Co.KG
Martener Hellweg 60
DE- 44379 Dortmund
Phone
+49 231/91 72 11-0
Fax
+49 231/91 72 11-22
www.bahco.de
info@bahco.de

BAHCO

TCRB/03/2022-EN